Duct

Slim & Compact design

In the case of bottom return air connection, not only does the indoor unit design allow for installation in a narrow ceiling space of up to 270mm, Further space savings have been achieved by mounting the electrical control box internally inside the chassis.

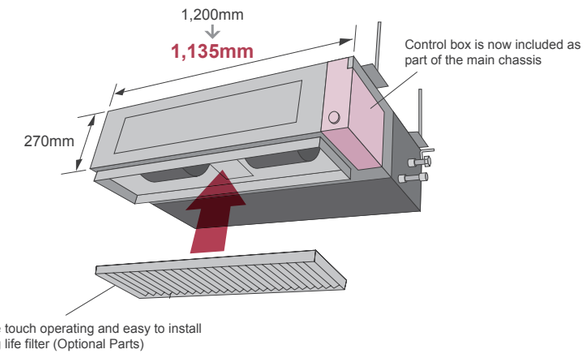

Two-direction drain piping

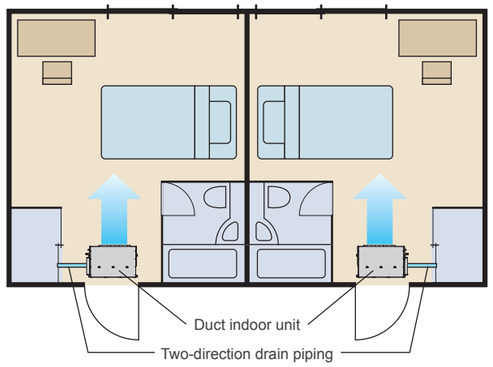

Installation styles

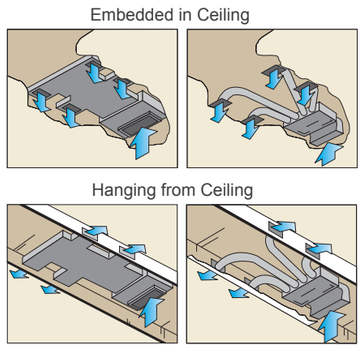

Easy maintenance

See below for the case of rear suction type

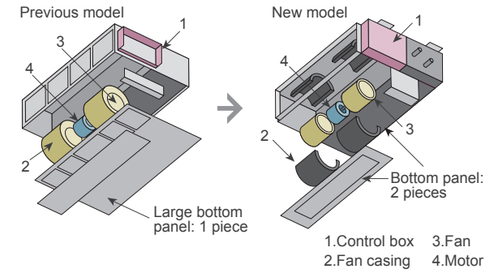

Structural improvement is attained by making the bottom panel two pieces, front and rear. The internal fan casing is also manufactured in two pieces, namely upper and lower. The maintenance of the motor and fan can be easily carried out by removing the rear panel and the lower part of the casing while leaving the main chassis installed.

Optional parts

Remote Sensor Unit:	UTD-RS100 / UTY-XSZX
Drain Pump Unit:	UTZ-PX1NBA
External Control Set:	UTD-ECS5A

Specifications

Model No.	Indoor unit		ARY25UU	ARY30UU	ARY36U(1)	ARY36UU	ARY45UU
	Outdoor unit		AOY25UU	AOY30UU	AOY36UU(1)	AOY36UU	AOY45UU
Power Source		V/Ø/Hz	230/1/50	230/1/50	230/1/50	400/3/50	400/3/50
Capacity	Cooling	kW	7.00	8.40	10.50	10.50	12.70
	Heating		7.70	9.50	12.70	12.70	14.30
Input Power	Cooling/Heating	kW	2.65/2.33	2.99/2.63	3.60/3.65	3.60/3.65	4.38/4.39
EER - Energy Class	Cooling	W/W	2.64-D	2.81-C	2.92-C	2.92-C	2.90
COP - Energy Class	Heating		3.30-C	3.61-A	3.48-B	3.48-B	3.26
Running Current	Cooling/Heating	A	11.8/10.5	14.0/12.4	16.0/16.5	6.1/6.2	7.7/7.7
Moisture Removal		l/h	2.5	3.0	3.5	3.5	5.0
Noise (Indoor)	Cooling H/M/L	dB(A)	38/36/34	40/38/36	43/41/39	43/41/39	44/42/40
Noise (Outdoor)	Cooling		53	53	54	54	54
Airflow Rate (High)	Indoor/Outdoor	m^3/h	1100/3200	1400/3300	1750/6100	1750/6100	1800/6100
Net Dimension H x W x D	Indoor	mm	270x1135x700	270x1135x700	270x1135x700	270x1135x700	270x1135x700
		kg(lbs)	43(95)	43(95)	43(95)	43(95)	45(99)
	Outdoor	mm	650x830x320	830x900x330	1165x900x330	1165x900x330	1165x900x330
		kg(lbs)	59(130)	69(152)	98(216)	94(207)	113(249)
Piping Connections (Small / Large)		mm	9.52/15.88	9.52/15.88	9.52/15.88	9.52/15.88	9.52/19.05
Max Pipe Length (Chargeless)		m	25	30	50	50	50
Height Difference			15	15	30	30	30
Operation Range	Cooling	°CDB	0~43	0~43	0~43	0~43	0~43
	Heating		-7~24	-7~24	-10~24	-10~24	-10~24
Refrigerant			R410A	R410A	R410A	R410A	R410A

Dimensions

Models: ARY25UU / ARY30UU / ARY36U(1) / ARY36UU / ARY45UU

(Unit : mm)

*Service accessibility must be allowed for when installing the product.
Please consult the installation manual for the necessary service access size.

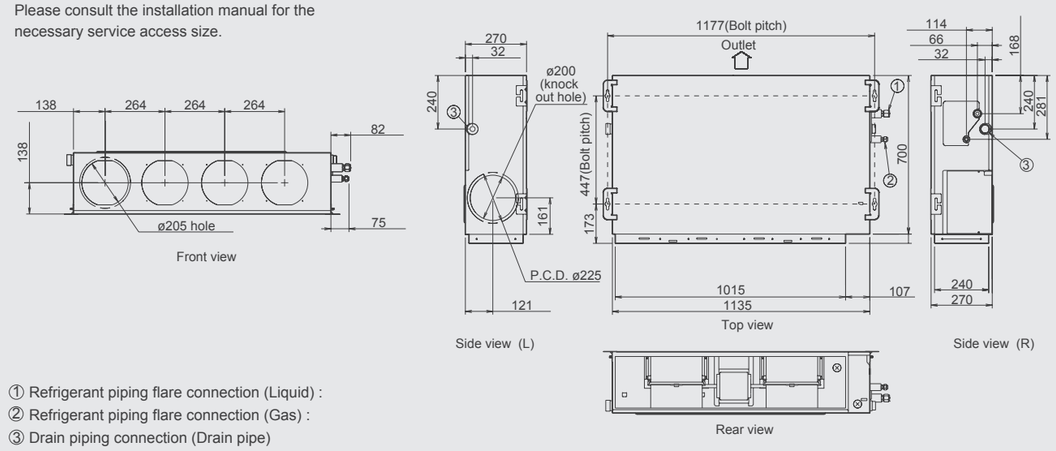

① Refrigerant piping flare connection (Liquid) :
② Refrigerant piping flare connection (Gas) :
③ Drain piping connection (Drain pipe)